1-1/2" Metallic Models

ARO PRO 1-1/2" metallic diaphragm pumps achieve flow rates of up to 90 GPM (340.7 LPM) and offer a wide array of material and porting configurations. These pumps are often used for transfer, filling, recirculation and batching in Paint, Oil & Gas, Mining, Construction, Chemical and Petrochemical markets.

Ratio:	1:1
Maximum Flow:	90-g.p.m. (340.7-l.p.m.)
Displacement per cycle:	0.64-Gallons (2.42-Liters)
Air Inlet: (Female)	1/2 - 14 N.P.T.F. - 1
Fluid Inlet/Outlet:	1-1/2 11-1/2 N.P.T.F. - 1
	Rp 1-1/2 (1-1/2 - 11 BSP parallel)
Max. operating pressure:	120-psi (8.3-bar)
Suspended solids max. dia.:	1/4-inch (6.4-mm)
Weight: lbs (kg)	666150-X-C (aluminum) 51.5 (23.4)
	666151-X-C (stainless steel) 84.5 (38.3)
	666152-X-C (cast iron) 79.5 (36.1)
Note: Add 23-lbs (10.4-kg) for cast iron air motor section	
Maximum dry suction lift: ft (m)	19 (5.8)
Sound Level:	70 PSI 60 Cycles/Min 80.5 db(A)

66617A-133-C

Ordering

Position	1	2		3	4	5		6
Example:	6661X	X	-	X	X	X	-	C

Position 1 Center Body	Position 2 Fluid Caps Manifold Mat.	Position 3 Seat Material	Position 4 Ball Check Material	Position 5 Diaphragm Material
5 - Aluminum, N.P.T.F. 6 - Cast Iron, N.P.T.F. 7 - Aluminum, BSP 8 - Cast Iron, BSP	0 - Aluminum (steel hardware) 1 - Stainless Steel (steel hardware) 2 - Cast Iron (steel hardware) A - Aluminum, (stainless hardware) B - Stainless Steel (stainless hardware) C - Cast Iron (stainless hardware)	1 - Aluminum 2 - 316 Stainless Steel 3 - Polypropylene 4 - PVDF (Kynar) 5 - Carbon Steel 8 - Hard 400 Stainless Steel	1 - Neoprene 2 - Nitrile 3 - Viton 4 - PTFE 5 - E.P.R. 6 - Acetal 8 - Polyurethane A - Stainless Steel C - Hytrel E - Santoprene	1 - Neoprene 2 - Nitrile 3 - Viton 5 - E.P.R. 6 - Acetal 4 - PTFE / Santoprene 9 - Hytrel B - Santoprene

Accessories

Air Line Connection Kit* | 66084-1 (Piggyback Filter/Regulator with gauge, pipe nipple and 5-foot air hose)
Cycle Counter Kit | 66975
Service Repair Kits | 637118-C (air section)
637124-XX (fluid section)
Wall Mount | 62133

1-1/2" Metallic Dimensions and Flow Charts

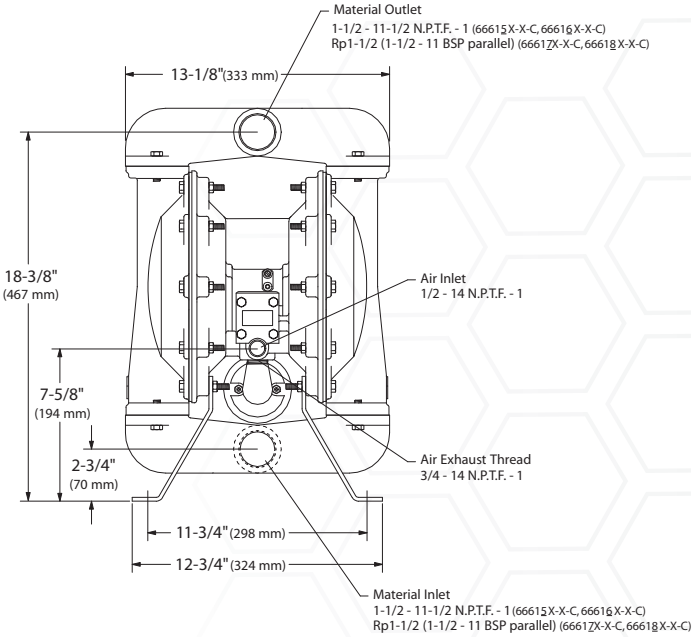

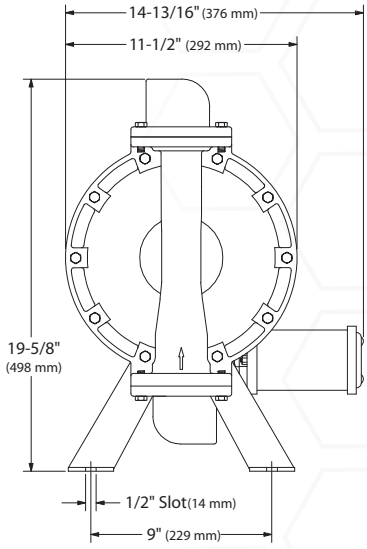

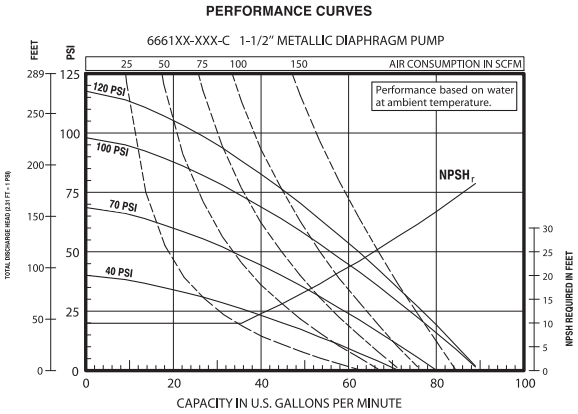

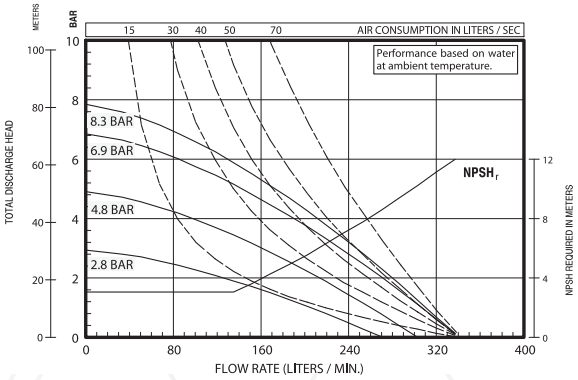

Refer to www.AROzone.com for full size flow curves.
For additional information contact
technical support at 1.800.495.0276